AKS 2004/3004

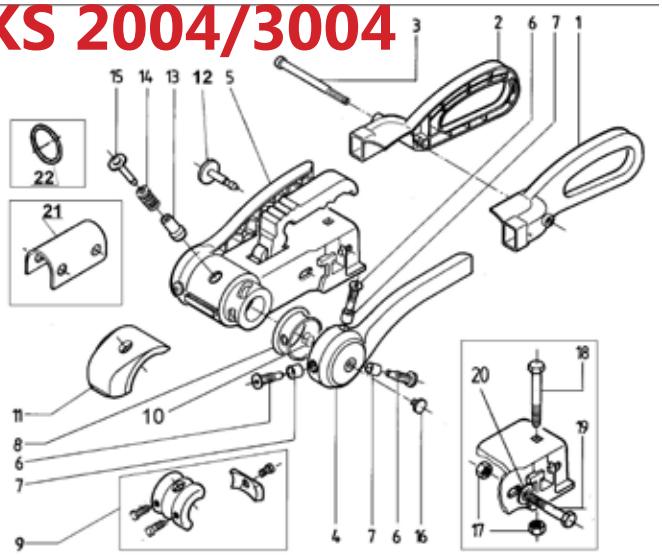

No.	Description	AL-KO	Grove
1	Handle left	690243	**007730**
2	Handle right	690244	**007731**
1-2	Handle complete	1552795	**007937**
3	Cylinder bolt	690246	
4	Arm left	690241	**007733**
5	Arm right	690242	**007734**
6	Bearing bolt (locked with loctite)	372284	**007717**
7	Bearing bush with plain bearing	380307	**007736**
8	Sealing ring	372166	**007737**
9	Set front/rear pads AKS 2004	1220756	**007935**
9	Set front/rear pads AKS 3004	691418	**007936**
10	O-ring	703149	
11	Bump rubber soft dock 3004	690251	
11	Bump rubber soft dock 2004	1221462	
12	Set side friction pads to 1993	585208	**008004**
12	Set side friction pads from 1994	287763	**008005**
13	Signal button inner	372288	**007722**
14	Compression spring	372285	**007721**
15	Signal button outer	372287	**007720**
13-15	Signal button complete	286799	**007719**
16	Stopper	583885	
17	Locking nut m12	371932	**007738**
18	Mushroom head bolt m12x75	603392	**007739**
19	Cylinder bolt m12x75 2004	704439	**007740**
19	Cylinder bolt m12x75 3004	692034	**007741**
20	Washer	700140	
21	Distance binder	690841	
22	Snap ring	2072400208	
	Fixing kit	1336334	**007743**

AKS 3004 Mk2

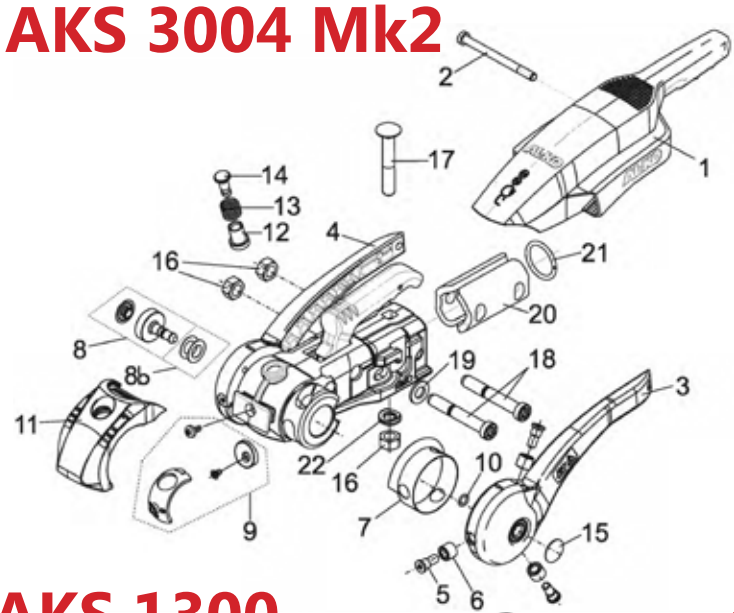

No.	Description	AL-KO	Grove
1	Handle	693589	
2	Bolt 8x97 torx- 8.8	690246	
3	Arm left	690241	**007733**
4	Arm right	690242	**007734**
5	Bolt dac	372284	
6	Bearing bush cpl	380307	
7	Sealing ring	372166	
8	Set side friction pads	287763	**008005**
8b	Shim kit (4x0.3mm, 2x0.5mm)	138776	**007932**
9	Set front/rear friction pads	691418	**007936**
10	O-ring 9x2	703149	
11	Soft-dock aks	693590	
12	Signal button inner	372288	**007722**
13	Compression spring	372285	**007721**
14	Signal button outer	372287	**007720**
12-14	Signal button complete	286799	**007719**
15	Stopper	1367606	
16	Self-locking nut m12	371932	**007738**
17	Bolt flat round m12x75	603392	**007739**
18	Bolt 12x78	692034	**007741**
19	Washer	700140	
20	Distance binder d35	692318	
20	Distance binder d45	692319	
21	Clamping ring	2072400208	
22	Formscheibe	663457	

AKS 1300

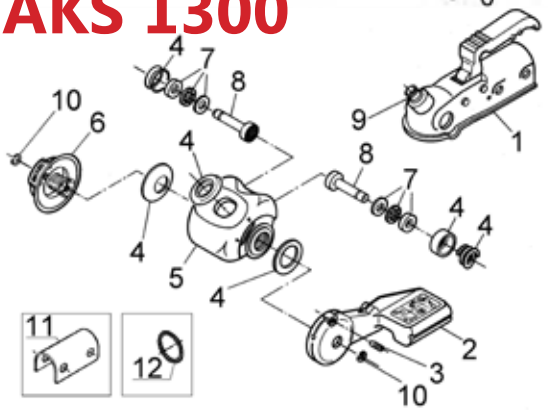

No.	Description	AL-KO	Grove
1	Body complete with indicator		
2	Lever Flame red	1225283	**007700**
3	Pressure pad	603153	**007701**
4	Joints & gaskets inc spring	246340	**007702**
5	Floating caliper		
6	Hand wheel Flame red	1225285	**007704**
7	Bearings set	246338	**007705**
8	Friction pads set (no shims)	638057	**007957**
	Shim kit (4x0.3mm, 2x0.5mm)	138776	**007932**
9	Engage indicator	246341	
10	Split rings	246337	**007707**
11	Spacer	690841	
12	Spacer ring	2072400208	
	Fixing kit	622175	**007703**
	Fixing kit for safety device	622872	**007706**

AKS 2700

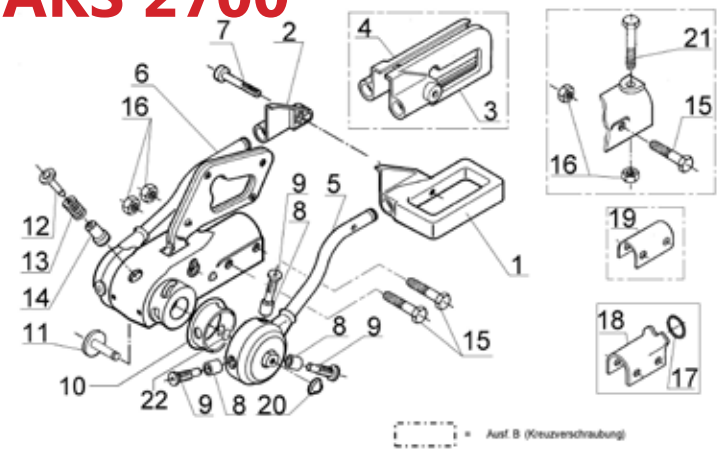

No.	Description	AL-KO	Grove
1	Grip plate left type A	372161	**007708**
2	Grip plate right type A	372162	**007709**
3	Grip plate left type B	581158	**007710**
4	Grip plate right type B	581159	**007711**
5	Compression washer left	573912	**007712**
6	Compression washer right	573913	**007713**
7	Bolt cylinder	373547	
8	Bearing bush with plain bearing	380307	**007736**
9	Bearing bolt (safed with loctite)	372284	**007717**
10	Sealing ring	372166	**007727**
11	Set pressure bolt screwable	1220758	
	Set pressure bolt pluggable	287763	**008005**
12	Signal button outer	372287	**007720**
13	Compression spring	372285	**007721**
14	Signal button inner	372288	**007722**
12-14	Signal button complete	286799	**007719**
15	Nut hex m12x80 10.9	703556	
16	Self-locking nut hex m12	701966	
17	Clamping ring	2072400208	
18	Distance binder 40mm type A	372936	**007726**
	Distance binder 35mm type A	372937	**007727**
19	Distance binder(con. 45)type B	372462	**007728**
20	Stopper	583885	
22	O-ring	703149	
	Fixing kit	648936	**007725**
	Fixing kit for safety device	623531	**007724**

161S Delta overrun assembly
with gas strut handbrake

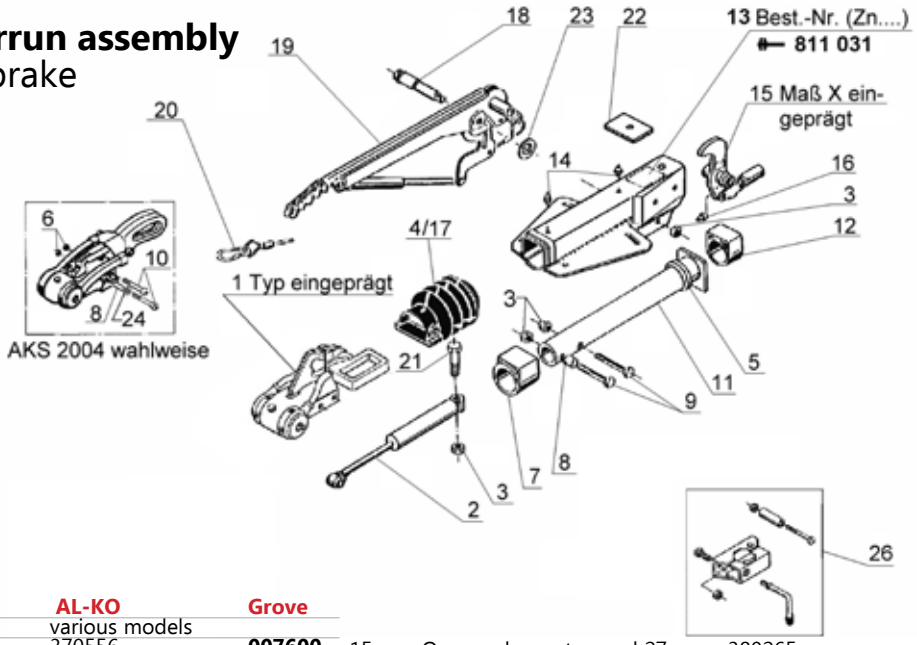

No.	Description	AL-KO		Grove
1	Coupling head	various models		
2	Damper current	370556		**007600**
	Damper	370558		**007605**
3	Hex nut m12	702750		
4	Gaiter	366356		**007601**
5	Bump rubber	371372		
6	Hex nut m12	371932		
7	Front bearing bush, not reamed	353943	kit>	**007606**
8	Spacer	370559		
9	Hex bolt m12 x 70 for AK 160	700061		
	Hex bolt m12 x 75 for AK 300	701959		
	Hex bolt m12 x 90 for AK 350	702823		
10	Hex bolt m12 x 75 for AKS	692034		
11	Overrun shaft	571873		
12	Rear bearing bush, not reamed	353942	Kit>	**007606**
13	Housing comp. with bearings	quote ETI no.		
14	Grease nipple	375900		
15	Overrun lever stamped 27	380265		
	Overrun lever stamped 30	380285		
16	Grease nipple inc in 15	700203		
17	Gaiter for AKS 2004/3004	607133		**007735**
18	Handbrake pivot bolt	581145		**007622**
19	Handbrake assy (inc 20)	220096		**007623**
20	Breakaway cable	368605		
21	Hex bolt m12 x 90	700312		
22	Reinforcement plate	581699		
23	Washer	370693		
24	Washer	700140		
26	Pressed steel clamp	293020		**007619**
	Cast clamp	285750		**007620**

251S Delta overrun assembly
with gas strut handbrake

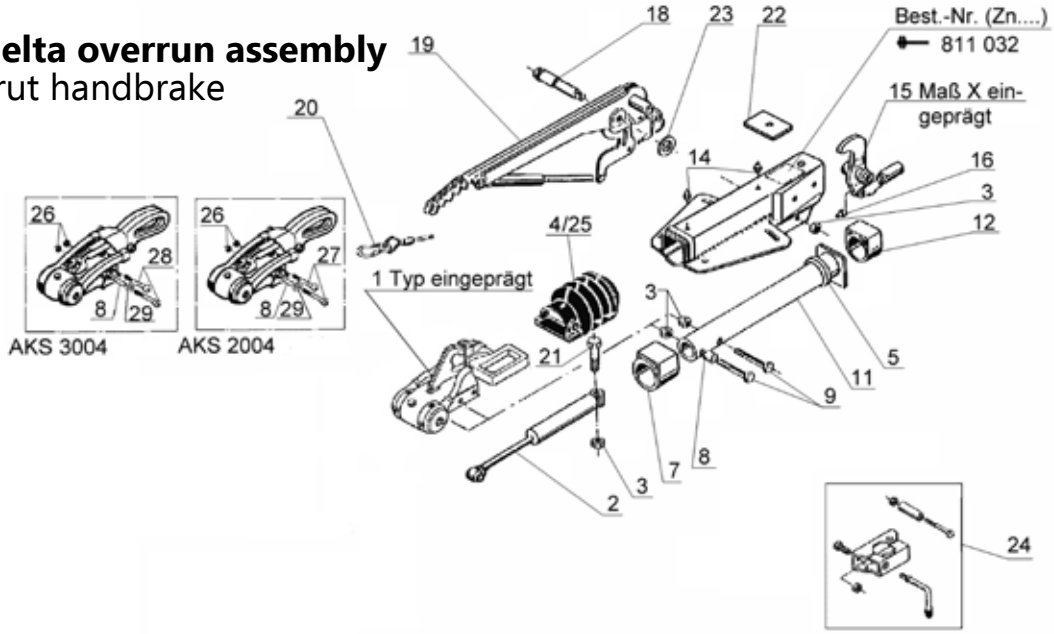

No.	Description	AL-KO		Grove
1	Coupling head	various models		
2	Damper	370589		**007625**
3	Hex nut m12	702750		
4	Gaiter	366356		**007601**
5	Bump rubber	371372		
6	Hex nut m12	702750		
7	Front bearing bush, not reamed	353943	Kit>	**007606**
8	Spacer	357242		
9	Hex bolt m12 x 80	700945		
10	Housing comp. with bearings	quote ETI no		
11	Overrun shaft	571874		
12	Rear bearing bush, not reamed	353942	Kit>	**007606**
14	Grease nipple	375900		
15	Overrun lever stamped 27	380525		
	Overrun lever stamped 30	380526		
	Overrun lever stamped 33.5	380527		
16	Grease nipple inc in 15	700203		
18	Handbrake pivot bolt	581145		**007622**
19	Handbrake assy (inc 17&20)			
	-7/95	220098		**007628**
	-8/95	220096		**007623**
20	Breakaway cable	368605		
21	Hex bolt m12 x 90	700312		
22	Reinforcement plate	581699		
23	Washer	370693		
24	Pressed steel clamp	293020		**007619**
	Cast clamp	285750		**007620**
25	Gaiter for AKS 2004/3004	607133		**007735**
26	Hex nut m12	371932		
27	Hex bolt m12 x 75	704439		
28	Hex bolt m12 x 75	692034		
29	Washer	700140		

161S Delta overrun assembly
with spring cylinder handbrake

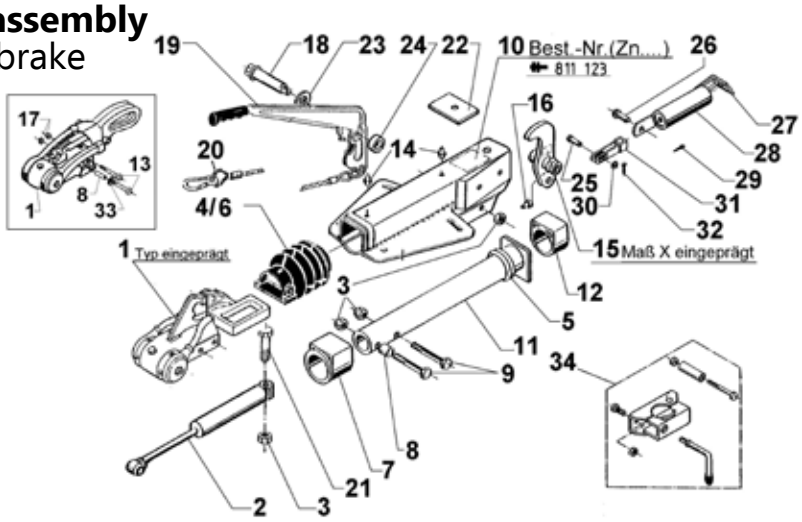

No.	Description	AL-KO		Grove
1	Coupling head	various models		
2	Damper current	370556		**007600**
	Damper	370558		**007605**
3	Hex nut m12	702750		
4	Gaiter for AKS 2000	366356		**007601**
5	Bump rubber	371372		
6	Gaiter for AKS 2004/3004	607133		**007735**
7	Front bearing bush, not reamed	353943	Kit>	**007606**
8	Spacer	370559		
9	Hex bolt m12 x 70 for AK	700061		
10	Housing comp. with bearings	quote ETI no.		
11	Overrun shaft	571873		
12	Rear bearing bush, not reamed	353942	Kit>	**007606**
13	Hex bolt m12 x 75	692034		
14	Grease nipple	375900		
15	Overrun lever stamped 27	380310		
	Overrun lever stamped 30	380468		
16	Grease nipple inc in 15	700203		
17	Safety nut m12	371932		
18	Handbrake pivot bolt	2077710503		**007609**
19	Handbrake assy (inc 20)	354259		**007610**
20	Breakaway cable	368605		
21	Hex bolt m12 x 90	700312		
22	Reinforcement plate	581699		
23	Washer	700625		
24	Bush	358470		
25	Rivet 10x25	647287		
26	Hex bolt m12x90	2076810609		
27	Tension bar	2170110608		
28	Spring cylinder	2075020601		**007634**
29	Split pin	700192		**007616**
30	Washer	700139		
31	Fork head	2073890606		
32	Splint	700191		
33	Washer	700140		
34	Pressed steel clamp	293020		**007619**
	Cast clamp	285750		**007620**

90 S/3 Overrun assembly
with spring cylinder handbrake

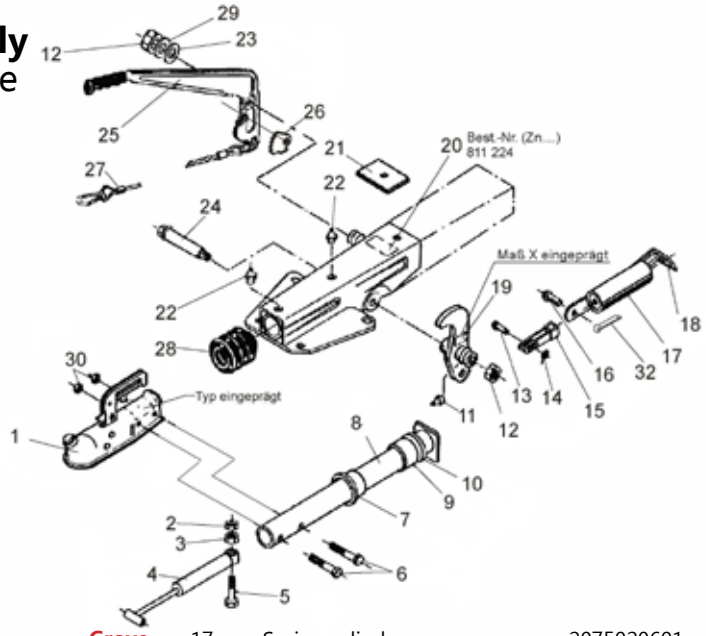

No.	Description	AL-KO	Grove
1	Coupling head	various models	
2	Safety nut m10	375724	
3	Nut hex m10	700109	
4	Shock absorber	359987	**007630**
5	Bolt hex m10x50	705140	
6	Bolt hex m10x50	700281	
7	Bush (pressed in body)	625601	
8	Draw tube welded	625626	**007627**
9	Bush (pressed in body)	625602	
10	Damping rubber	2072410207	**007629**
11	Grease nipple	700203	
12	Nut hex m12	704065	
13	Rivet 10x25	647287	
14	Washer 10,5	700139	
15	Fork head	2073890606	**007633**
16	Bolt	2076810609	
17	Spring cylinder	2075020601	**007634**
18	Tension binder	2076830608	**007635**
19	Overrun lever Ih = 90: 27	354238	
20	Housing complete	quote ETI no.	
21	End stop plate	625627	
22	Grease nipple	2171710001	**007608**
23	Washer (17x27x2)	700625	
24	Bearing bolt	625773	
25	Hand brake lever complete	294938	
26	Gear segment	2045480001	
27	Brake away cable with hook	368605	
28	Bellows	2073890210	**007638**
29	Spring washer	701968	
30	Nut hex m12	704065	
	Pressed steel clamp	293020	**007619**
	Cast clamp	285750	**007620**

150 V Euro overrun assembly

2nd generation

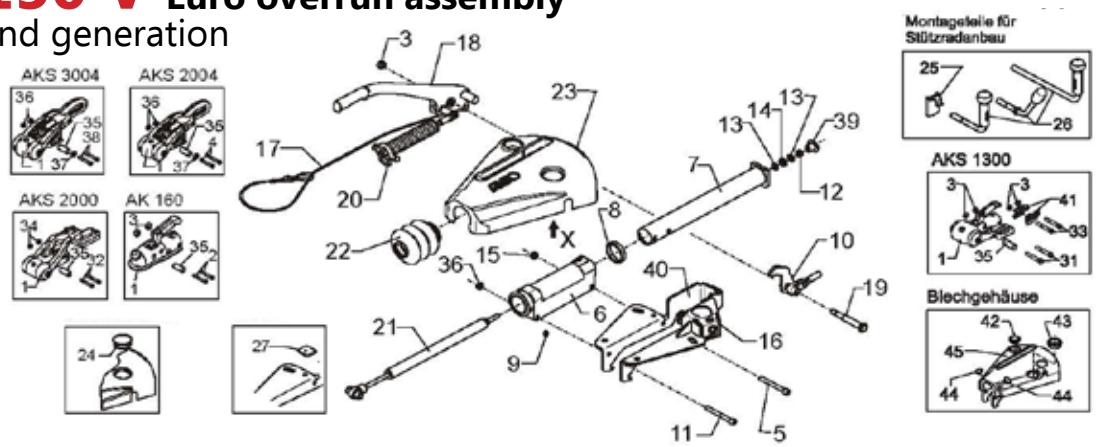

No.	Description	AL-KO	Grove
1	Coupling head	various models	
2	Hex bolt m12x70	700061	
3	Hex nut m12	704065	
4	Bolt m12x75	704439	
5	Bolt m10x85	704298	
6	Bearing cartridge	690180	
7	Draw tube	643095	
8	Damping rubber	371372	
9	Grease nipple	700204	
10	Overrun lever 90 : 27	646417	
	Overrun lever 90 : 30	690007	
12	Hex nut m10	700122	
13	Washer	700139	
14	Hard rubber washer	643098	
15	Hex nut m10	700122	
16	Bracket left welded	1351209	
17	Breakaway cable	368605	
18	Handbrake lever(inc 17 &19)	648474	
19	Pivot bolt	647154	
20	Hex nut m12	700283	
21	Damper	690389	
22	Gaiter	366356	**007601**
23	Covering cap (see 45)		
24	Stopper	1312564	
25	Clamp welded	690182	
26	Locking handle short	646423	
	Locking handle bent	610561	
	Locking handle long	1362330	
27	Rubber stop collar	690003	
31	Hex bolt m12x75	701959	
32	Hex bolt m12x80	703556	
33	Hex bolt m12x80	704048	
34	Hex nut m12	701966	
35	Bush	647925	
36	Hex nut m12	371932	
37	Washer	700140	
38	Hex bolt m12x75	692034	
39	Wing nut	690393	
40	Bracket right welded	1540139	
41	Plate left	605162	
	Plate right	605163	
42	Connector holder 7 pin	643103	
43	Connector holder 13 pin	1302148	
	Combi connector 7 pin	1386639	
44	Cover	643106	
45	Sheet metal casing welded	648914	

200V Euro overrun assembly

2nd generation

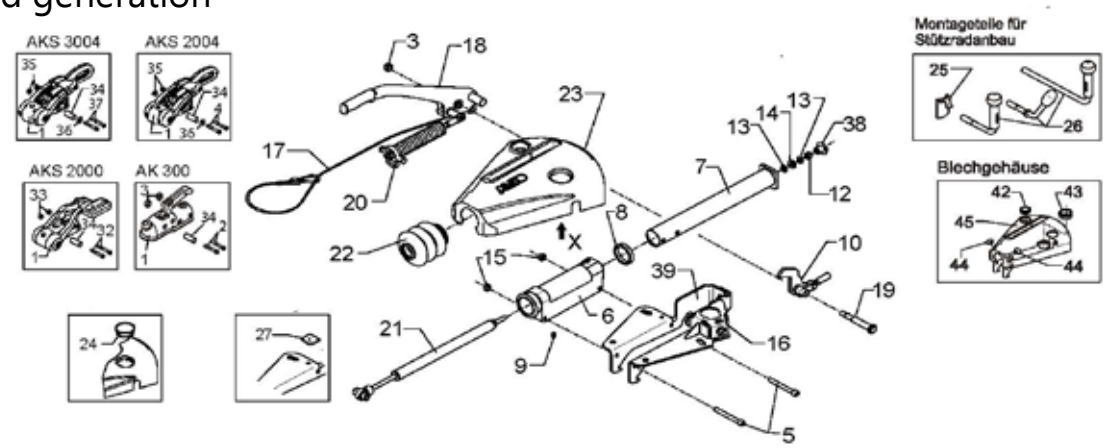

No.	Description	AL-KO	Grove
1	Coupling head	various models	
2	Hex bolt m12x75	701959	
3	Hex nut m12	702750	
4	Bolt m12x75	704439	
5	Bolt m10x85	704298	
6	Bearing cartridge	690180	
7	Draw tube	643096	
8	Damping rubber	371372	
9	Grease nipple	700204	
10	Overrun lever 90 : 27	646417	
	Overrun lever 90 : 30	690007	
	Overrun level 90 : 34.5	690031	
11	Bolt m10x85	703551	
12	Hex nut m10	700122	
13	Washer	700139	
14	Hard rubber washer	643098	
15	Hex nut m10	700122	
16	Bracket left welded	1351209	
17	Breakaway cable	368605	
18	Handbrake lever(inc 17 &19)	648475	
19	Pivot bolt	647154	
20	Hex nut m12	700283	
21	Damper	690388	
22	Gaiter	366356	**007601**
23	Covering cap (see 45)		
24	Stopper	1312564	
25	Clamp welded	690182	
26	Locking handle short	646423	
	Locking handle bent	610561	
	Locking handle long	1362330	
27	Rubber stop collar	690003	
32	Hex bolt m12x80	703556	
33	Hex nut m12	701966	
34	Bush	647923	
35	Safety nut m12	371932	
36	Washer	700140	
37	Hex bolt m12x75	692034	
38	Wing nut	690393	
39	Bracket right welded	1540140	
42	Connector holder 7 pin	643103	
43	Connector holder 13 pin	1302148	
	Combi connector 7 pin	1386639	
44	Cover	643106	
45	Sheet metal casing welded	648914	

1637 Wheel brake
Euro plus 500kg

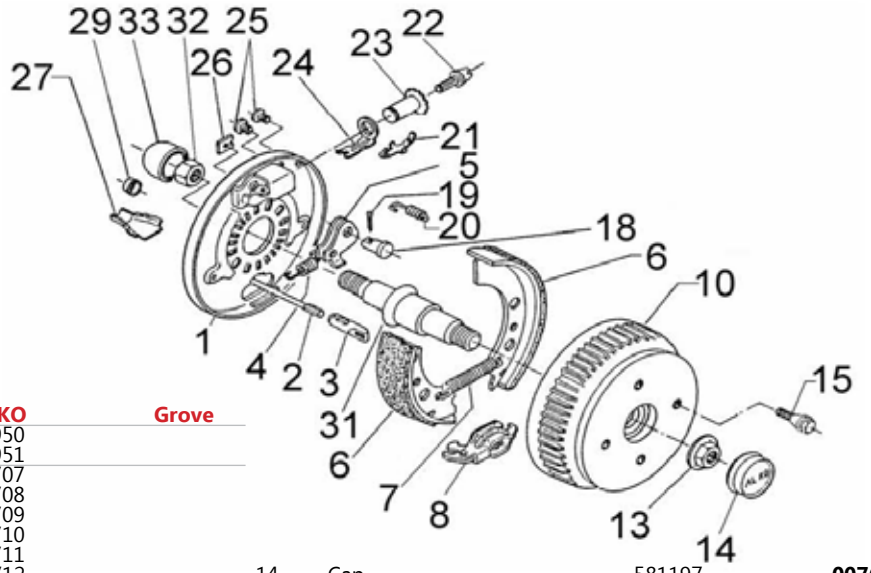

No.	Description		AL-KO	Grove
1	Brake welding plate left		571950	
	Brake welding plate right		571951	
2	Bowden cable	350mm	299707	
		530mm	299708	
		770mm	299709	
		890mm	299710	
		1020mm	299711	
		1130mm	299712	
		1320mm	299713	
		1430mm	299714	
		1620mm	299715	
		1790mm	299716	
3	Connecting eye		604262	**007651**
4	Reverse lever spring left		2188870001	**007652**
	Reverse lever spring right		372805	**007653**
5	Auto-reverse lever left		384308	**007654**
	Auto-reverse lever right		384309	**007655**
6	Brake pad set		1213888	**007660**
	inc. 7, 20 & 26 + pads (left 384481, right 384296)			
7	Tension spring		2182150003	**007657**
8	Spread hinge lock		570666	**007658**
10	Brake drum complete with bearing			
	98 x 4 / m12 x 1.5		623748	
	100 x 4 / m12 x 1.5 > 10/94		623749	**007659**
	112 x 5 / m12 x 1.5		623750	
	Bearing set c/w circlip & flange nut 1224800			
13	Flange nut 20mm (32mm socket)		581200	**007662**
14	Cap		581197	**007663**
15	Wheel bolt			
	Conical m12 x 1.5		2081670018	
	Spheric m12 x 1.5		2081670020	**007664**
	Spheric m12 x 1.52 (R13)		372138	
18	Bearing bolt		368651	**007667**
19	Split pin 4 x 20		700192	**007616**
20	Compression spring		2088800003	**007669**
21-24	Adjuting assembly		387706	**007670**
21	Flat spring		581879	
22-23	Adjusting nut & bolt		21873708	
24	Compression binder		581878	
25	Stopper 10x13x11		373245	**007671**
26	Cover plate		2382610002	**007672**
27	Bowden cable shell		371387	**007673**
29	Cap		371389	
31	Stub axle < 900kg		581563	
32	Self locking nut		702881	
33	Protecting cap		604472	**007676**

2051 Wheel brake
Euro plus 650kg

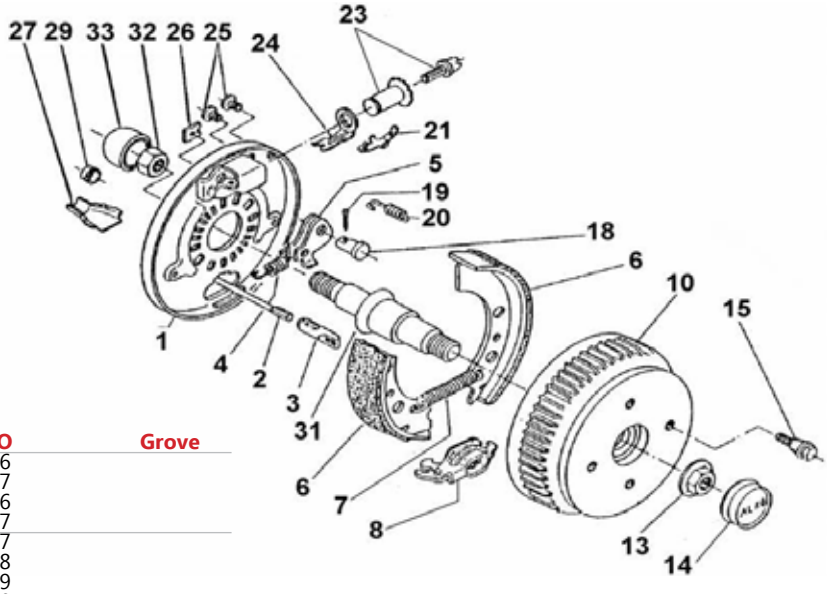

No.	Description		AL-KO	Grove
1	Brake plate <650kg	left	571376	
		right	571377	
	Brake plate <750kg	left	571376	
		right	571377	
2	Bowden cable	350mm	299707	
		530mm	299708	
		770mm	299709	
		890mm	299710	
		1020mm	299711	
		1130mm	299712	
		1320mm	299713	
		1430mm	299714	
		1620mm	299715	
		1790mm	299716	
3	Connecting eye		604262	**007651**
4	Reverse lever spring		2187370003	**007677**
5	Auto-reverse lever left		571386	**007678**
	Auto-reverse lever right		571387	**007679**
6	Brake pad set		1213889	**007683**
	inc. 7, 20 & 26 + pads (both 384294)			
7	Tension spring		2082000007	**007681**
8	Spread hinge lock		571510	**007682**
10	Brake drum complete with bearing			
	98 x 4 / m12 x 1.5		573191	
	100 x 4 / m12 x 1.5		573192	**007684**
	112 x 5 / m12 x 5.5 < 650kg		573193	
	112 x 5 / m12 x 5.5 < 750kg		586450	
	120 x 5 / m12 x 5.5 < 650kg		614805	
	Bearing set c/w circlip & flange nut 1224803			
13	Flange nut 20mm (32mm socket)		581200	**007662**
14	Cap		581197	**007663**
15	Wheel bolt			
	Conical m12 x 1.5		2081670018	
	Spheric m12 x 1.5		2081670020	**007664**
	Spheric m12 x 1.52 (R13)		372138	
18	Bearing bolt		368651	**007667**
19	Split pin 4 x 20		700192	**007616**
20	Compression spring		2088800003	**007669**
21-24	Adjuting assembly		387706	**007670**
21	Flat spring		368405	
22-23	Adjusting nut & bolt		218737	
24	Compression binder		368361	
25	Stopper 10x13x11		373245	**007671**
26	Cover plate		2382610002	**007672**
27	Bowden cable shell		371387	**007673**
29	Cap		371389	
31	Stub axle rugged < 900kg		581563	
	Stub axle rugged 900-1500kg		581043	
	Stub axle forge 900-1500kg		583664	
32	Self locking nut		702881	
33	Protecting cap		604472	**007676**

2361 Wheel brake
Euro1 500kg

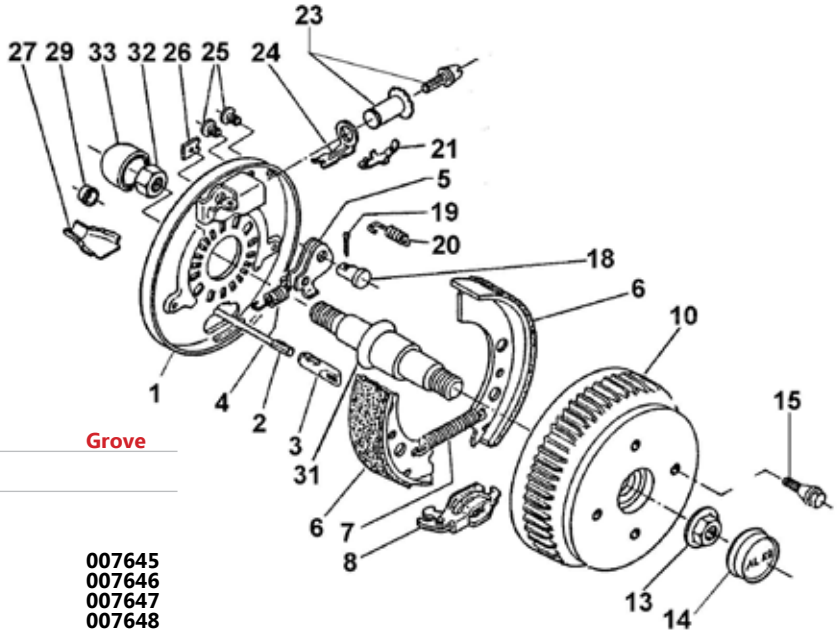

No.	Description		AL-KO	Grove
1	Brake welding plate left		572372	
	Brake welding plate right		572373	
2	Bowden cable	350mm	247281	
		530mm	247282	
		770mm	247283	
		890mm	247284	**007645**
		1020mm	247285	**007646**
		1130mm	247286	**007647**
		1320mm	247287	**007648**
		1430mm	247288	
		1620mm	247289	
		1790mm	247290	
3	Connecting eye		604262	**007651**
4	Reverse lever spring		2187370003	**007677**
5	Auto-reverse lever left		571386	**007678**
	Auto-reverse lever right		571387	**007679**
6	Brake pad set		1213890	**007687**
	inc. 7, 20 & 26 + pads (both 384509)			
7	Tension spring		2082000007	**007681**
8	Spread hinge lock		571510	**007682**
10	Brake drum complete with bearing			
	112 x 5 / m12 x 1.5		573194	
	140 x 5 / m12 x 1.5		578834	
	165.1 x 5 / m16		578835	
	Bearing set c/w circlip & flange nut 1224805			
13	Flange nut 20mm (32mm socket) 582508			**007689**
14	Cap		582505	**007690**

15	Wheel bolt		
	Conical m12 x 1.5	2081670018	
	Spheric m12 x 1.5	2081670020	**007664**
18	Bearing bolt	368651	**007667**
19	Split pin 4 x 20	700192	**007616**
20	Compression spring	2088800003	**007669**
21-24	Adjuting assembly	387706	**007670**
21	Flat spring	368405	
22-23	Adjusting nut & bolt	21873708	
24	Compression binder	368361	
25	Stopper 10x13x11	373245	**007671**
26	Cover plate	2382610002	**007672**
27	Bowden cable shell	371387	**007673**
29	Cap	371389	
31	Stub axle 1300 - 1800kg	582541	
32	Self locking nut	703112	
33	Protecting cap	582542	**007693**

Parts list

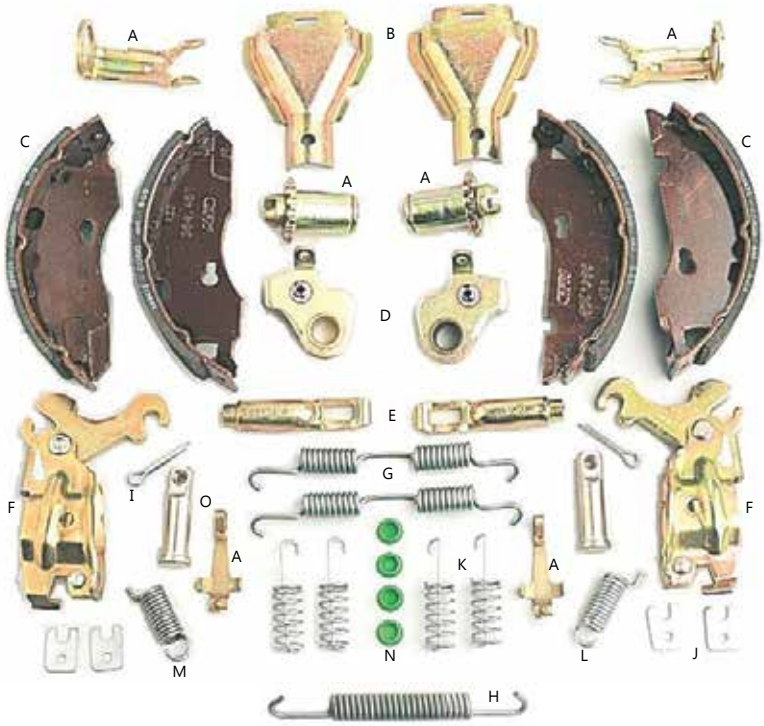

No.	Description		
A	Wheel brake adjuster complete	387706	**007670**
B	Bowden cable shell	371387	**007673**
C	Brake kit inc G/H, J & K		
	1637	1213888	**007660**
	2051	1213889	**007683**
	2361	1213890	**007687**
D	Auto-reverse lever		
	1637 Left	384308	**007654**
	1637 Right	384309	**007655**
	2051/2361 Left	571386	**007678**
	2051/2361 Right	571387	**007679**
E	Connecting cable eye	604262	**007651**
F	Spread hinge lock		
	1637	570666	**007658**
	2051/2361	571510	**007682**
	Tension spring		
G	1637	2182150003	**007657**
H	2051/2361	2082000007	**007681**
I	Splt pin 4 x 20	700192	**007616**
J	Cover plate	2382610002	**007671**
K	Compression spring	2088800003	**007669**
	Reverse lever spring		
L	1637 Left	2188870001	**007652**
	1637 Right	372805	**007653**
M	2051/2361	2187370003	**007677**
N	Stopper 10x13x11	373245	**007671**
O	Bearing Bolt	368651	**007667**

Corner Steadies

No.	Description	AL-KO	Grove
1	Corner steady nut 20mm thread	355198	**007429**
	Corner steady nut 16mm thread	371580	**007428**
2	Bolt	580521	
3	Washer	703456	
4	Corner steady spindle 680x20	355815	**007431**

AL-KO	A (closed)	B	C	Grove
205808	505mm	470mm	260mm	**007432**
205817	605mm	510mm	260mm	**007433**
267265	505mm	495mm	280mm	**007434**
1221694	605mm	600mm	292mm	**007435**

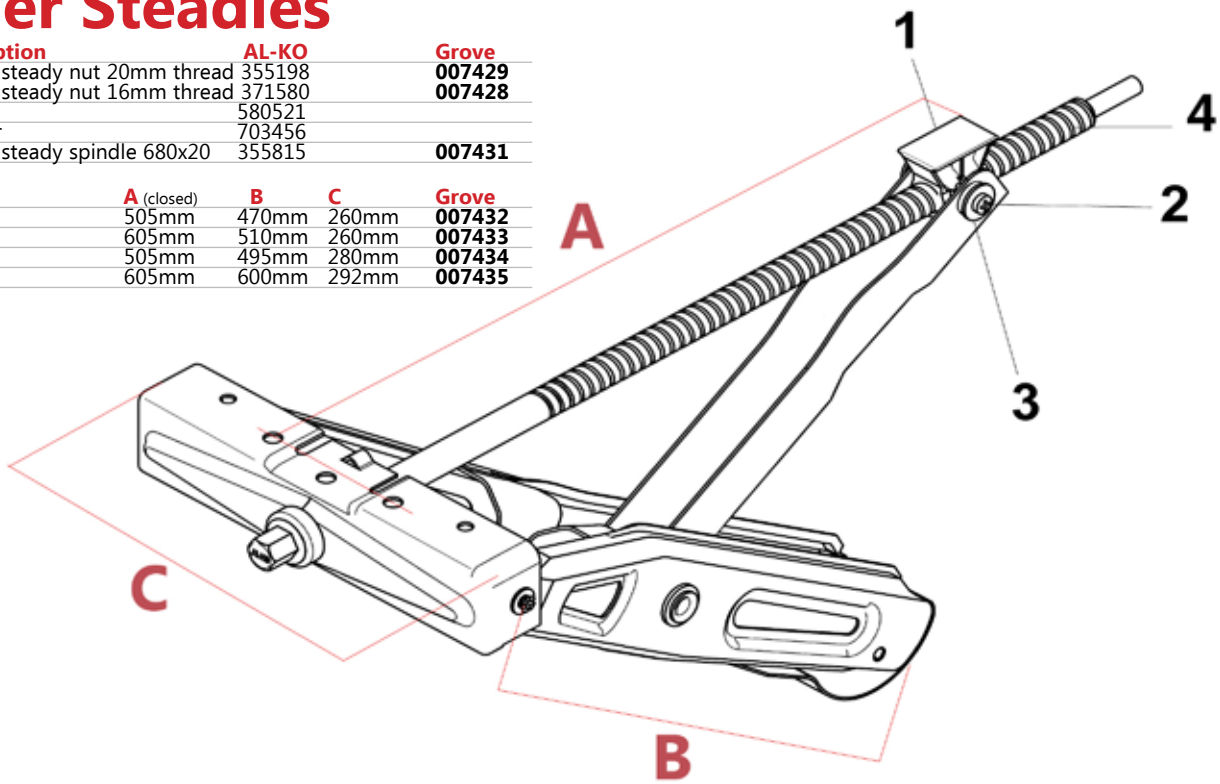

Secure Wheel Locks

No.	Description	AL-KO	Grove
1	Receiver		
2	Receiver bolt m12x14 (3)	705148	
3	Spring ring b12 din127 (3)	702000	
4	Bolt stopper m20	691885	**S41482**
5	Locking ring 36x1.75 din471	1389007	
6	Lonzenge (specify number) see main catalogue section B		
7/8	Security bolt, lock and key		
	must be replaced through the security card registration system		

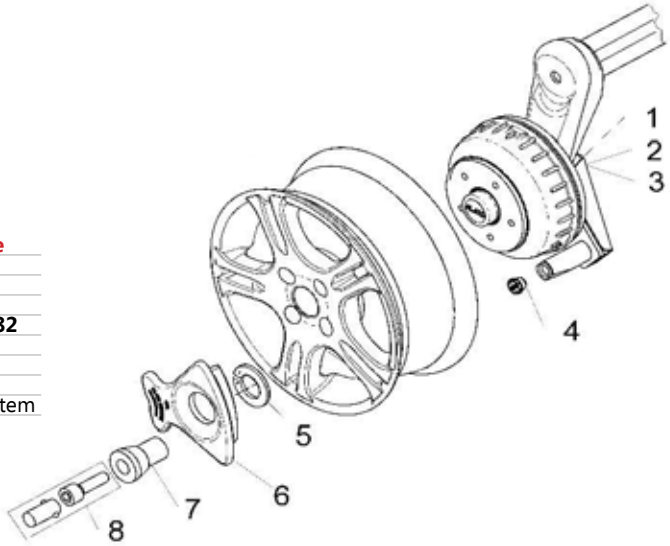

AL-KO Trailer Control

No.	Description	AL-KO	Grove
1	Wire set universal with led	1239040	
2	Plastic bush	692163	
3	Hex nut m10	700109	
4	Pusher adjustment	692165	
5	Pusher emergency release	692166	
6	ATC	on request	
7	Hex nut m3	705357	
8	Washer a3.2	700941	
9	Lens head screw m3x12	702294	
10	Led bracket		
	For covered overrun device	692196	
	For uncovered overrun device	692198	
11	Cable retainer	1239092	
12	Angle bracket	692177	
13	User manual	1366607	
	User manual	1366608	
14	Bolt		
	m10x35 (single axle)	703662	
	m12x25 (tandem axle)	703340	
15	Wire clamp big	1239081	
	Wire clamp small	1239080	
16	Fan washer	703460	
	Fan washer	704266	
17	Safety nut m10	375724	
	Safety nut m12	371932	
18	Repair kit (not illustrated)	1364288	

AL-KO SPARES

007130

007135

007178

007428

007429

007431

007432

007433

007434

007435

007600

007601

007604

007605

007606

007608

007609

007610

007616

007619

007620

007622

007623

007624

007625

007627

007628

007629

007630

007631

007633

007634

007635

007637

007638

007639

007640

007642

007645 - 890mm

007645 - 1020mm

007645 - 1130mm

007645 - 1320mm

AL-KO SPARES

007651

007652

007653

007654

007655

007657

007658

007659

007660

007662

007663

007664

007667

007669

007670

007671

007672

007673

007676

007677

007678

007679

007681

007682

007683

007684

007687

007689

007690

007693

007700

007701

007702

007703

007704

007705

007706

007707

007708

007709

AL-KO SPARES

007710

007711

007712

007713

007717

007719

007720

007721

007722

007723

007724

007725

007726

007727

007728

007729

007730

007731

007733

007734

007735

007736

007737

007738

007739

007740

007741

007743

007932

007934

007935

007936

007937

007957

008004

008005